2-WAY COMPACT FLANGED BALL VALVE, MANUALLY OPERATED AND AUTOMATED

Description:

- compact construction
- full passageway
- flanges acct. to EN1092-1 / PN40 and PN16
- top flange acc. to EN ISO 5211
- antistatic device
- blow out safe, spindle mounted from inside
- sealing for spindle with a triple chevron packing
- double body sealing
- three-piece chambered seat rings
- stainless steel hand lever
- any installation position

Range of application:

- high-quality flanged ball valve for highest demands
- the ball does not jut out of the body - the valve is removable even in closed condition
- space-saving installation by compact construction
- top flange for direct mounting
- pneumatic and electric automatable
- working pressure PN40 - PN10 (see pressure-temperature-diagram)
- temperature range: -10°C up to +200°C (see pressure temperature diagram)

Comments

The steel ball valve is made of solid material and up to DN40 with screw-in flanges, from DN50 to DN200 with pre-screwed flanges. The **stainless steel type** up to DN40 is made of solid material with srew-in flanges, DN50 up to DN125 is made of cast iron with srew-in flanges and DN150 up to DN200 is made of cast iron with pre-screwed flanges. The stainless steel type from DN50 up to DN100 is optionally available made of solid material.

The ball valve also has an approval acc. to **TA-Luft**. **Flanges acc. to ANSI** or with feather key and groove are available. Likewise, the design as **floor drain valve**.

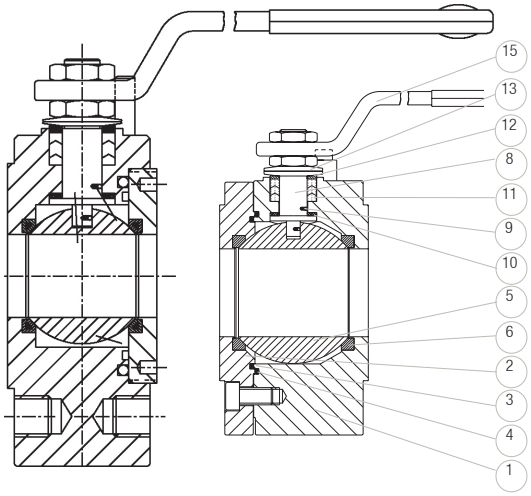

type made of 1.0402/1.4401 with screw-in flanges (left) and with pre-screwed flanges (right)

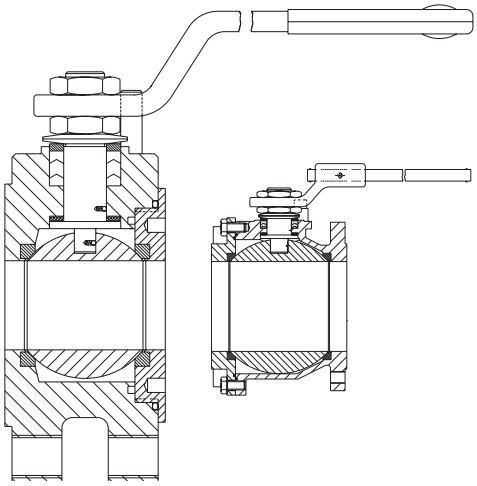

type made of 1.4408 (cast) with screw-in flanges (left) and with pre-screwed flanges (right)

pos.	part	standard VA		standard ST		optional material	
1	body	1.4401	O	1.0402 pretreated	J	1.4301 / 1.4308	P
		1.4408 (starting from DN50)	O			1.4401 (starting from DN50)	O
2	body screw connection	1.4401		1.0402 pretreated			
3	primary sealing	PTFE		PTFE			
4	secondary sealing	FKM		FKM			
5	ball	1.4401	O	1.4301	P		
6	seat sealing	PTFE	T	PTFE	T	PTFE-fibre glass reinforced*	G
						PTFE with metal core*	U
8	spindle	1.4401		1.4301			
9	antistatic device	1.4401		1.4401			
10	friction ring	PTFE		PTFE			
11	pressure sleeve	PTFE / graphite	R	PTFE / graphite	R		
12	thrust ring	1.4404		1.4404			
13	disc spring	50CrV4 galvanised zinc-plated		50CrV4 galvanised zinc-plated			
15	hand lever	St 37 galvanised zinc-plated		St 37 galvanised zinc-plated			

*other media temperature resistance with different seat sealing:

- PTFE-fibre glass reinforced: -10°C up to + 220°C
- PTFE with metal core: -10°C up to +220°C

options:

- OF: free of oil and grease
- ZG: certificate 3.1
- SV: spindle extension
- SP: gland extension
- HZ: heating jacket
- FS: fire-safe design
- TD: minimal clearance volume by means of half shells (
- TS: minimal clearance volume
- AE: external parts made of stainless steel
- EB: relief well
- HG: hand gear
- FW: free spindle
- EX: ATEX-certificate
- LD: lock device

For electric actuated valves only:

- AP: accumulator security pack
- PT: potentiometer
- PO: positioning system

For pneumatic actuated valves only:

- SD: sound absorber
- AD: exhaust air regulator
- PV: pilot valve For details see data sheet "GMV3197", "GMV3163" (3/2 way) and "MVA01" (5/2 way). Other types on request.
- PS: positioning indicator
  For details see data sheet "MCM2" (mechanical), "MCN2" (inductive, with ATEX 94/9/EC) and "MCS2" (inductive). Other types on request.

Carbon steel ball valves of the series KFA16 are provided with a modified coating (modified epoxy / poliamid primer RAL 5012 color blue with a film thickness of at least 0.030 mm). For outdoor applications a proper intermediate and finishing coat shall be applied within 90 days.

For details about the order code see "Order information". An overview of the complete material code you can find at the beginning of each product section of the product catalogue.

Pressure temperature diagram

The pressure temperature diagram shows the max. permitted working pressure in relation to the media temperature.

The pressure temperature diagram refers to the ball valve of this type. For the actuated units the actuator limits the permissible pressure range to the operating pressure as indicated above, as long as this is lower than the pressure range of the ball valve.

If your application has strong temperature variations, you may need additional options like a relief well, to meet the figures. Please tell us your temperature variations with your order.

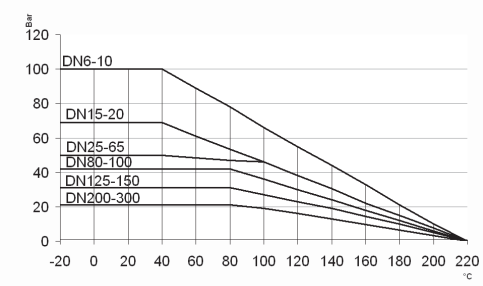

diagram for PTFE sealing

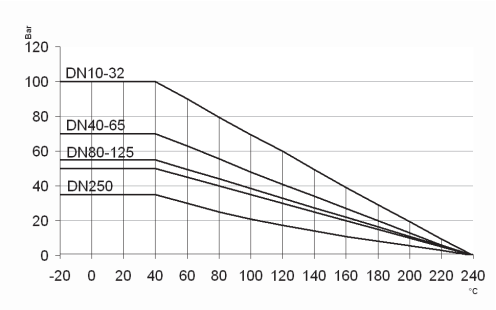

diagram for PTFE fibre-glass reinforced

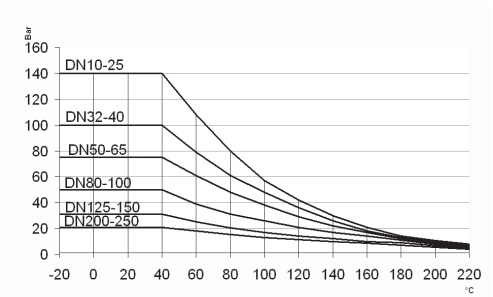

diagram for PTFE sealing with metal core (liquids)

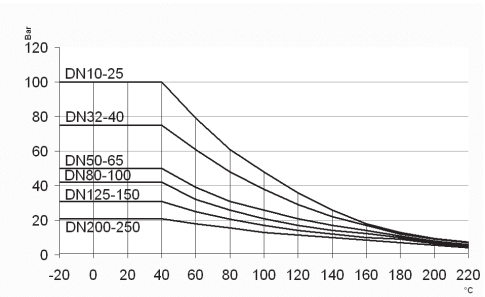

diagram for PTFE sealing with metal core (gases)

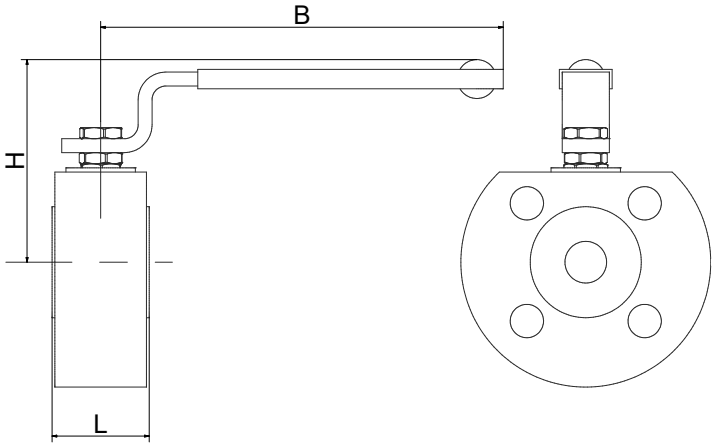

match code	size	nominal pressure	nominal size [mm]	L [mm]	H [mm]	B [mm]	CV* [m³/h]	torque** [Nm]	weight [kg]	
									ST	VA
KFA16-51-3xRxx	DN10	PN40	15	35	66	145	n/a	9	1.6	
KFA16-52-3xRxx	DN15	PN40	15	35	66	145	19.4	11	1.6	
KFA16-53-3xRxx	DN20	PN40	19	35	68	145	45.6	22	1.9	
KFA16-54-3xRxx	DN25	PN40	25	43	85	185	71.5	27	2.8	
KFA16-55-3xRxx	DN32	PN40	30	51	91	185	105	32	4.8	
KFA16-56-3xRxx	DN40	PN40	38	64	110	280	170	62	7.2	
KFA16-57-3xRxx	DN50	PN40	51	85	120	280	275	80	10.6	7.2
KFA16-58-1xRxx	DN65	PN16	64	103	144	370	507	132	19	11.5
KFA16-59-3xRxx	DN80	PN40	76	120	152	370	905	156	25	15.1
KFA16-60-1xRxx	DN100	PN16	101	155	174	470	1414	280	34	20.2
KFA16-61-1xRxx	DN125	PN16	118	182	188	650	2362	316	47	31
KFA16-62-1xRxx	DN150	PN16	152	234	256	750	3874	680	92	57
KFA16-63-1xRxx	DN200	PN16	203	310	294	900	7156	1020	181	92

***CV value:** The nominal flow rate CVs acc. to VDI/VDE 2173 shows the water quantity in cubic meter per hour with the valve fully opened, Δp=1 and the water temperature between 5°C and 30°C.

****Breakaway torque:** all data were determined with 16 bar water at normal ambient temperature. Multiplicator for frictional media is 1.3. If your configuration has special sealing material or your application has critical media consultation is obligatory.

[X]	KFA16	-	[XX]	[X]ROT	-	[X]	-	[XX]
1	2		3	4		5		6

Order information:

1: automation:

- no specification: manually operated
- D: pneumatic double acting
- S: pneumatic single acting
- E: electric actuated

2: type: KFA16

3: connection size:

- 51 63 (DIN, see table)
- 81-93 (ANSI, on request)

4: materials:

- 1. digit: body material
  J = steel
  O = stainless steel
- 2. digit: sealing for spindle
  R = PTFE graphite / carbon
- 3. digit: ball material
  O = stainless steel
- 4. digit: seat sealing
  T = PTFE (standard)
  U = PTFE metal core
  G = PTFE fibre-glass reinforced

5: actuator:

- no specification: steel hand lever
- automated: see column "actuator"

6: options (see "options")

Please ask for field specifications that are not listed in this data sheet.

Before installation please consider the installation and maintenance manual, especially the safety indications!

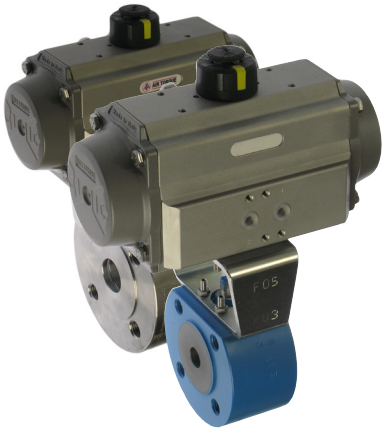

DKFA16 / SKFA16

High quality pneumatic actuator made of alloy with air connection according to NAMUR and positioning indicator. The actuator works with the rack/bevel method. For further details see the technical data sheet "DR/SC".

Types double acting (the actuator opens and closes with compressed air) and single acting (the actuator opens with compressed air and closes with spring pressure).

The actuators are configured for use with fluid, gas and antifriction medium. **For critical media it is strictly recommended to inform us!**

Description:

- working pressure: 0 - 16 bar
- pilot pressure: 6 - 8 bar
- medium temperature: -20°C up to +120°C (at max. ambient temperature 40°C)

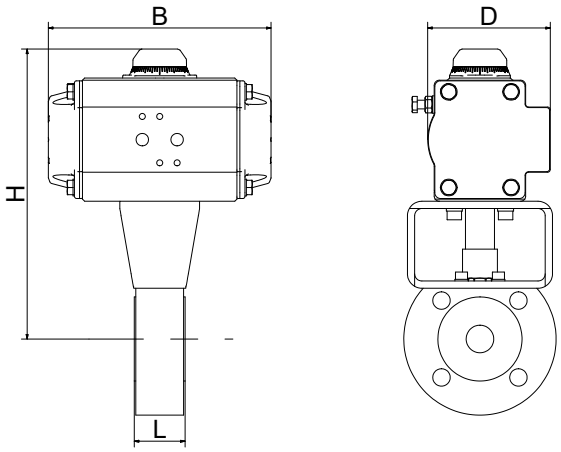

	double acting: DKFA16						single acting: SKFA16					
match code	actuator	H [mm]	B [mm]	D [mm]	weight [kg] ST	weight [kg] VA	actuator	H [mm]	B [mm]	D [mm]	weight [kg] ST	weight [kg] VA
xKFA16-51-3xRxx	DR010	168.5	118	62	2.57		SC015-J	171.5	136	72	2.92	
xKFA16-52-3xRxx	DR010	168.5	118	62	2.57		SC015-K	171.5	136	72	2.92	
xKFA16-53-3xRxx	DR015	174	136	72	3.12		SC030-K	190	153.5	84.5	3.92	
xKFA16-54-3xRxx	DR030	196	153.5	84.5	4.72		SC060-G	213	203.5	93	6.2	
xKFA16-55-3xRxx	DR030	201.5	153.5	84.5	6.72		SC060-H	218.5	203.5	93	8.2	
xKFA16-56-3xRxx	DR060	258	203.5	93	10.4		SC100-I	258	241	106	12	
xKFA16-57-3xRxx	DR060	260	203.5	93	13.8	10.4	SC150-H	272	259	118	17.32	13.9
xKFA16-58-1xRxx	DR100	277	241	106	23.32	15.8	SC220-H	317	304	136	28.92	21.4
xKFA16-59-3xRxx	DR150	297.5	259	118	30.82	20.9	SC220-J	325.5	304	136	34.92	25
xKFA16-60-1xRxx	DR220	354.5	304	136	43.3	29.5	SC450-I	386.5	394.5	166	52.3	38.5
xKFA16-61-1xRxx	DR300	380	333	146.5	58.1	42.1	SC450-J	400	394.5	166	65.3	49.3
xKFA16-62-1xRxx	DR450	431	394.5	166	108.15	73.2	SC1200-J	529	528	221.5	136	101.2
xKFA16-63-1xRxx	DR900	533.5	474	200	207.15	118.2	SC2000-H	611.5	605	262	250.4	161.2

Attention!

To avoid corrosion inside the spring chamber for single acting actuators caused by aggressive ambient air we recommend pilot valves with integrated air recirculation.

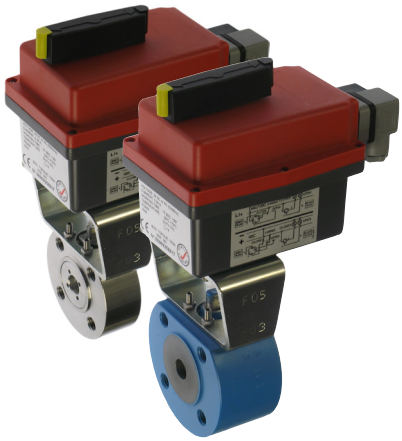

EKFA16

High-quality electric actuator in compact design with a body made of high-strength plastics. It has a high-performance motor and a gear drive made of metal. A central control room heater and an electronic torque limiter are equipped as standard. For further details see the technical data sheet "J".

Description:

- working pressure: 0 - 16 bar
- deviating medium temperature -20°C up to +100°C (at max. ambient temperature of 40°C)

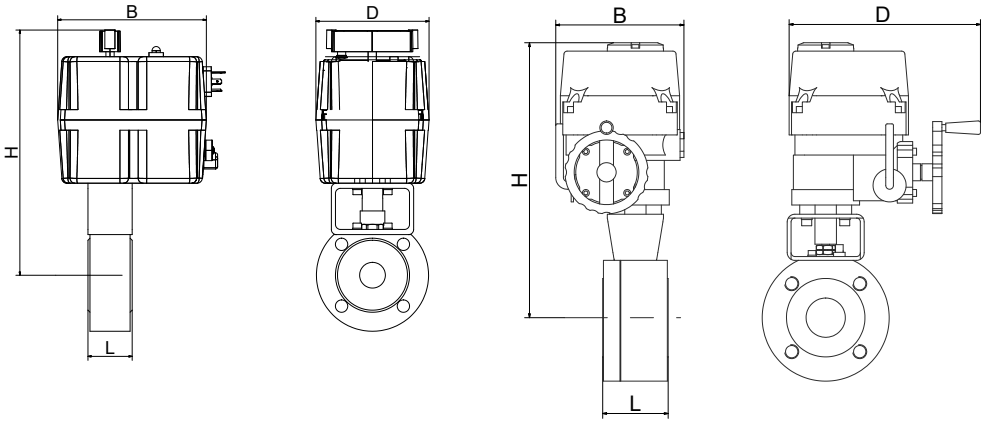

actuator of type J... (up to DN125). actuator series CH... (from DN150)

match code	actuator	H [mm]	B [mm]	D [mm]	weight [kg]	
					ST	VA
EKFA16-51-3xRxx	J210	209	169	104	2.6	
EKFA16-52-3xRxx	J420	231.5	177	110	3.25	
EKFA16-53-3xRxx	J420	234	177	110	3.55	
EKFA16-54-3xRxx	J435	262	177	110	4.75	
EKFA16-55-3xRxx	J435	267.5	177	110	6.75	
EKFA16-56-3xRxx	J485	319	177	110	10.5	
EKFA16-57-3xRxx	J485	321	177	110	13.9	10.5
EKFA16-58-1xRxx	J2140	406	235	214	24.8	17.3
EKFA16-59-3xRxx	J2140	414.5	235	214	30.8	20.9
EKFA16-60-1xRxx	J2300	423.5	235	214	39.8	26
EKFA16-61-1xRxx	J2300	457	235	214	52.8	37.5
EKFA16-62-1xRxx	CH800	537	380	284	118.6	83.6
EKFA16-63-1xRxx	CH1100	576	380	284	208.1	119.2

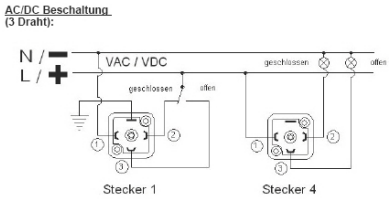

connection voltage type:

- 19: 24V AC/DC up to 240V AC/ DC
- other voltages on request

xKFA16-HZ

Ball valves with heating jacket maintain a constant medium temperature inside the valve and therefore allow a defined medium viscosity.

The valve is made of solid **steel or stainless steel** and is provided with a one-piece shell that is filled with heating medium through two connections. For the ball valve all options of the type KFA16 are suitable (see data sheet). On request the ball valve can be automated electrically or pneumatically.

The following properties apply for the heating jacket:

- heating medium: uncritically fluids
- working pressure for heating jacket: max. 25 bar
- heating medium temperature: max. 60°C

Optionally **other heating jacket connections** are possible as well as **higher heating medium pressure** and **designs for hot steam**.

pos.	part	standard VA		standard ST		optional material	
-	heating jacket	1.4301		1.4301		-1.0037	
-	heating jacket connection	1.4301		1.4301		-1.0037	

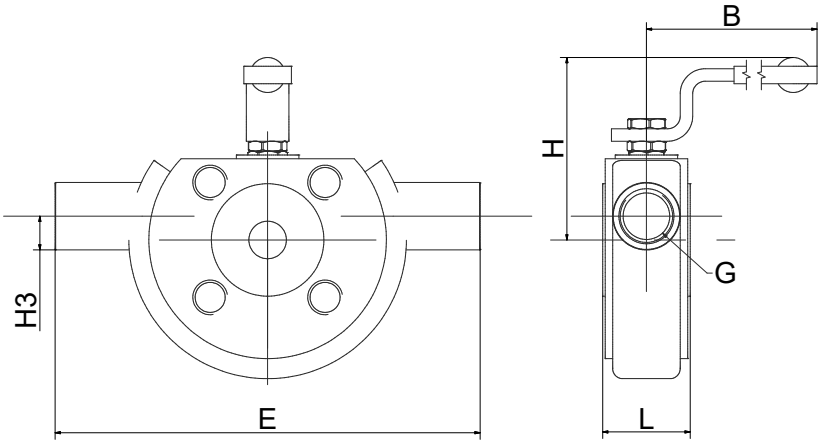

match code	size	nominal pressure	nominal size [mm]	L [mm]	H [mm]	B [mm]	E [mm]	H3 [Nm]	G [inch]
KFA16-51-3xRxx-HZ	DN10	PN40	15	35	66	145	170	0	1/2
KFA16-52-3xRxx-HZ	DN15	PN40	15	35	66	145	170	0	1/2
KFA16-53-3xRxx-HZ	DN20	PN40	19	35	68	145	180	0	1/2
KFA16-54-3xRxx-HZ	DN25	PN40	25	43	85	185	190	0	1/2
KFA16-55-3xRxx-HZ	DN32	PN40	30	51	91	185	210	25	1/2
KFA16-56-3xRxx-HZ	DN40	PN40	38	64	110	280	230	30	1/2
KFA16-57-3xRxx-HZ	DN50	PN40	51	85	120	280	250	30	1/2
KFA16-58-1xRxx-HZ	DN65	PN16	64	103	144	370	270	45	1/2
KFA16-59-3xRxx-HZ	DN80	PN40	76	120	152	370	300	50	1/2
KFA16-60-1xRxx-HZ	DN100	PN16	101	155	174	470	340	70	1
KFA16-61-1xRxx-HZ	DN125	PN16	118	182	188	650	360	80	1
KFA16-62-1xRxx-HZ	DN150	PN16	152	234	256	750	420	95	1
KFA16-63-1xRxx-HZ	DN200	PN16	203	310	294	900	500	130	1